REVISION				
REV.	ZONE	DESCRIPTION	DATE	DRAWNBY
A		INITIAL RELEASE	7/17/2025	L. BADONG

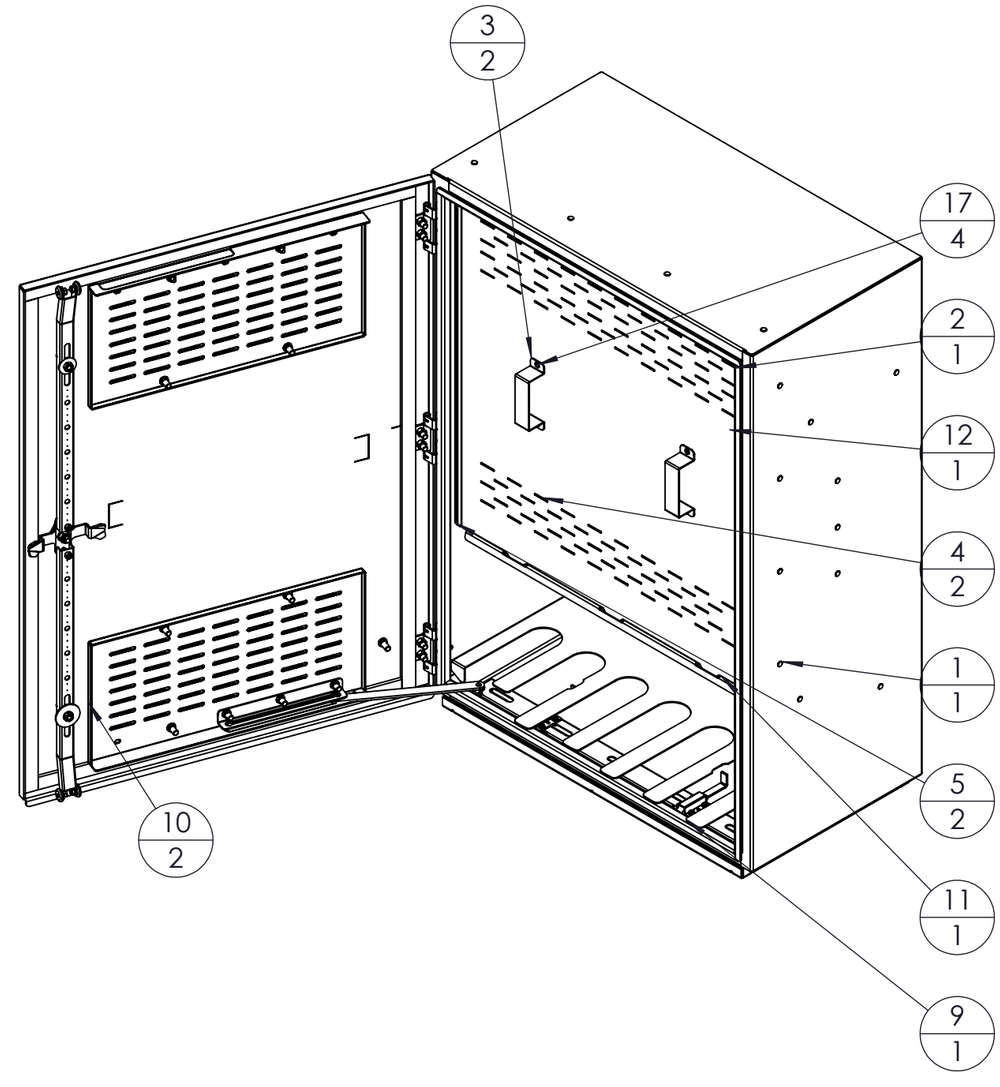

BILL OF MATERIAL

ITEM NO.	PART NUMBER	DESCRIPTION	QTY.
1	100-30043	ASSEMBLY, COMPLETE ENCLOSURE - 42X30X16 - ALU	1
2	250-40121	DEADFRONT, 42x30 ENC, PILOT LIGHT OPTION	1
3	250-00024	HANDLE, DEADFRONT	2
4	250-30065	BRACKET, CAMPLATE	2
5	250-20058-001	BRACKET, DEADFRONT, VERTICAL	2
6	250-30089	BRACKET, DEADFRONT, HORIZONTAL	1
7	Hinge-L2016_Leaf	-	2
8	1151A62 (McCarr)	RIGHT HAND LIFT-OFF HINGE, 2"H X 1-11/16"W LEAF	2
9	250-20057	PANEL, CABLE GUARD	1
10	250-20065 RevB	PLATE, DEFLECTOR	2
11	100-90001	ASSEMBLY, CAMPLATE, NO NEUTRAL, 400A FUSE ADAPTERS	1
12	100-90002	ASSEMBLY, BACKPANEL, 400A C1 W/ FUSES	1
13	890-0616E-1.25L	ASSEM, 3/8-16 UNC ZN X 1.25" BC - WF, WP, NH	3
14	890-0420G	ASSEM, 1/4-20 UNC ZN, NS, WF	26
15	BS-0420X0500-ZN	BOLT, SERRATED - 1/4-20 UNC X 0.5 - 5 ZN	4
16	STC-#024X0500-ZN	SCREW, THREAD CUTTING - #10-24 UNC X 0.5 - 5 ZN	2
17	ROB-R632X0809-SS	RIVET, OPEN END BLIND - 3/16 X 0.251-0.375 GRIP RANGE - SS	4

MATERIAL 76766.57 lbs

FINISH
BARE

PROPRIETARY AND CONFIDENTIAL

THE INFORMATION CONTAINED IN THIS DRAWING IS THE SOLE PROPERTY OF FOXFAB POWER SOLUTIONS ANY REPRODUCTION IN PART OR AS A WHOLE WITHOUT THE WRITTEN PERMISSION OF FOXFAB POWER SOLUTIONS IS PROHIBITED.

DRAWN BY	SAVED ON
LB	7/18/2025

BD	TOP DIE	BOTTOM DIE
-	-	-

UNLESS OTHERWISE SPECIFIED:
DIMENSIONS ARE IN INCHES
TOLERANCES:
X ± .25
X.X ± .1
X.XX ± .05
X.XXX ± .025
ANGULAR ± 1
INTERPRET DIM AND TOL. PER:
ASME Y14.5

Foxfab
Power Solutions
2579-188 ST.
SURREY, BC V3Z 2A1
(604) 460 - 9310
WWW.FOXFAB.COM

TITLE:
FFCC-C1-400-C5-G-ALU-LZ-FUS

THIRD ANGLE: | SIZE **B** | SCALE 1:20 | REV A

ITEM NO. | DWG. NO. 003-90001 | SHEET 1 OF 2

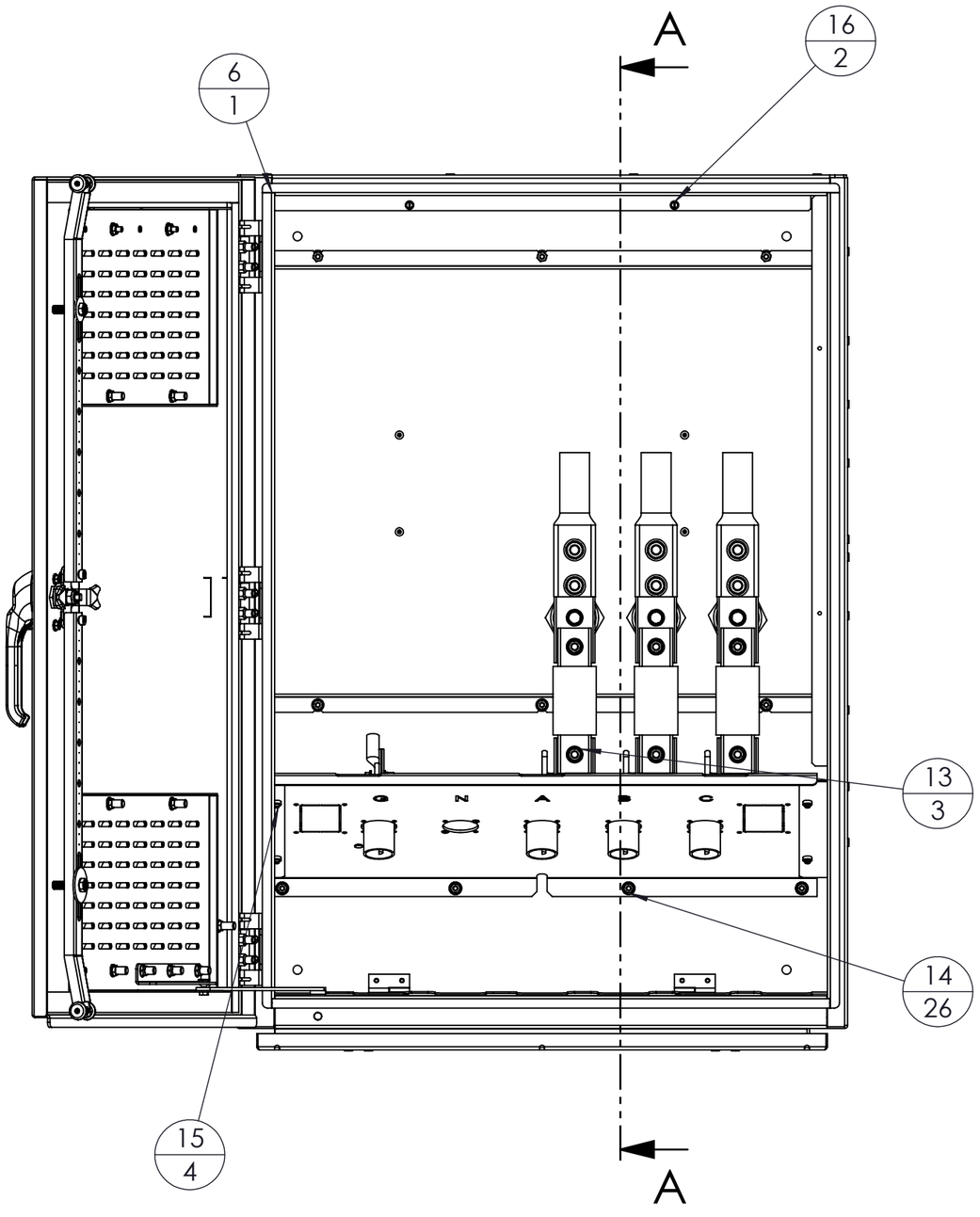

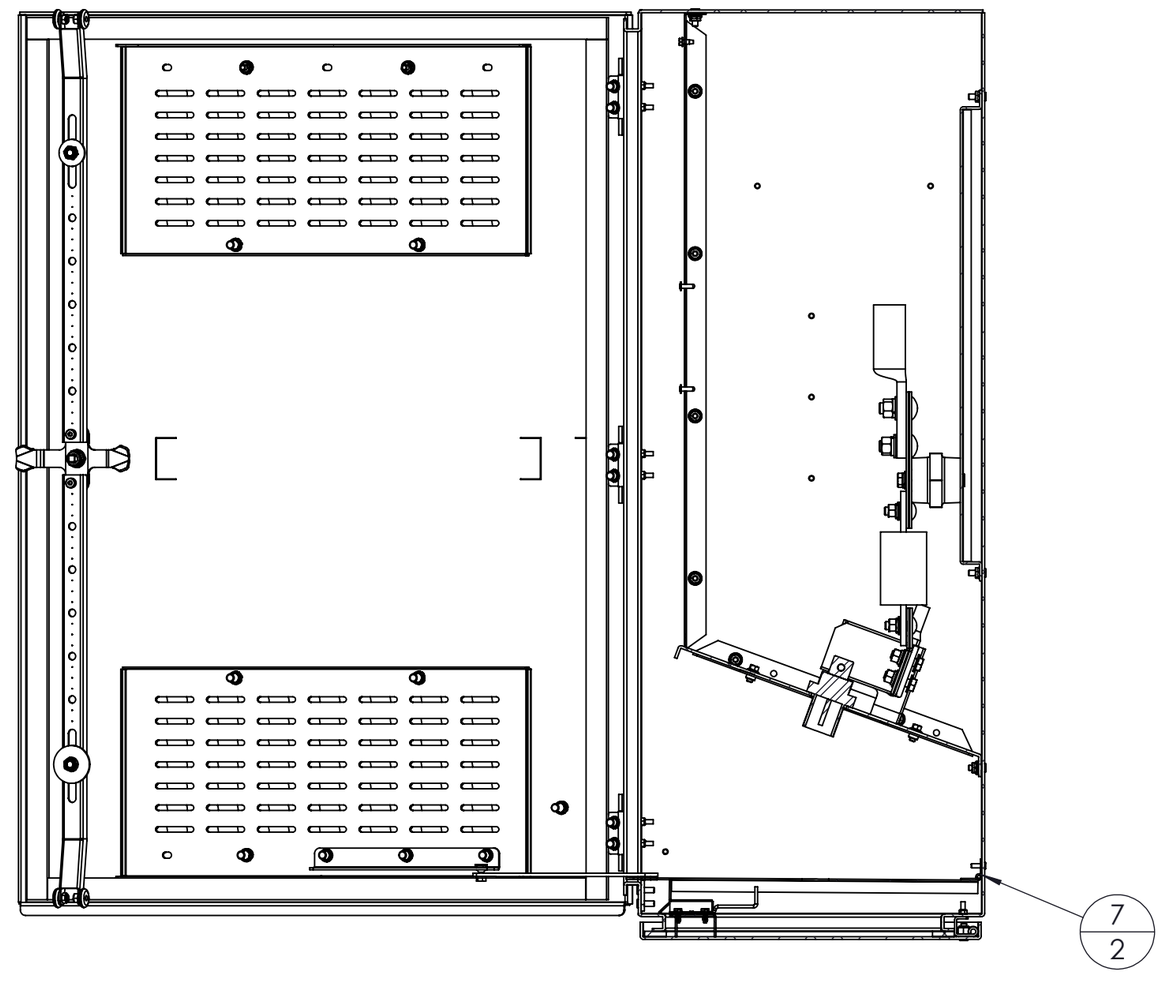

SECTION A-A

SCALE 1 : 7

MATERIAL 76766.57 lbs	DRAWN BY LB	SAVED ON 7/18/2025		Foxfab Power Solutions — 2579-188 ST. SURREY, BC V3Z 2A1 (604) 460 - 9310 WWW.FOXFAB.COM
FINISH BARE	BD -	TOP DIE -	BOTTOM DIE -	TITLE: FFCC-C1-400-C5-G-ALU-LZ-FUS
PROPRIETARY AND CONFIDENTIAL THE INFORMATION CONTAINED IN THIS DRAWING IS THE SOLE PROPERTY OF FOXFAB POWER SOLUTIONS ANY REPRODUCTION IN PART OR AS A WHOLE WITHOUT THE WRITTEN PERMISSION OF FOXFAB POWER SOLUTIONS IS PROHIBITED.	UNLESS OTHERWISE SPECIFIED: DIMENSIONS ARE IN INCHES TOLERANCES: X ± .25, X.X ± .1, X.XX ± .05, X.XXX ± .025, ANGULAR ±1, INTERPRET DIM AND TOL. PER: **ASME Y14.5**			THIRD ANGLE: SIZE **B** SCALE 1:20 REV A
				ITEM NO. DWG. NO. 003-90001 SHEET 2 OF 2

REVISION				
REV.	ZONE	DESCRIPTION	DATE	DRAWNBY
A		INITIAL RELEASE	7/17/2025	L. BADONG

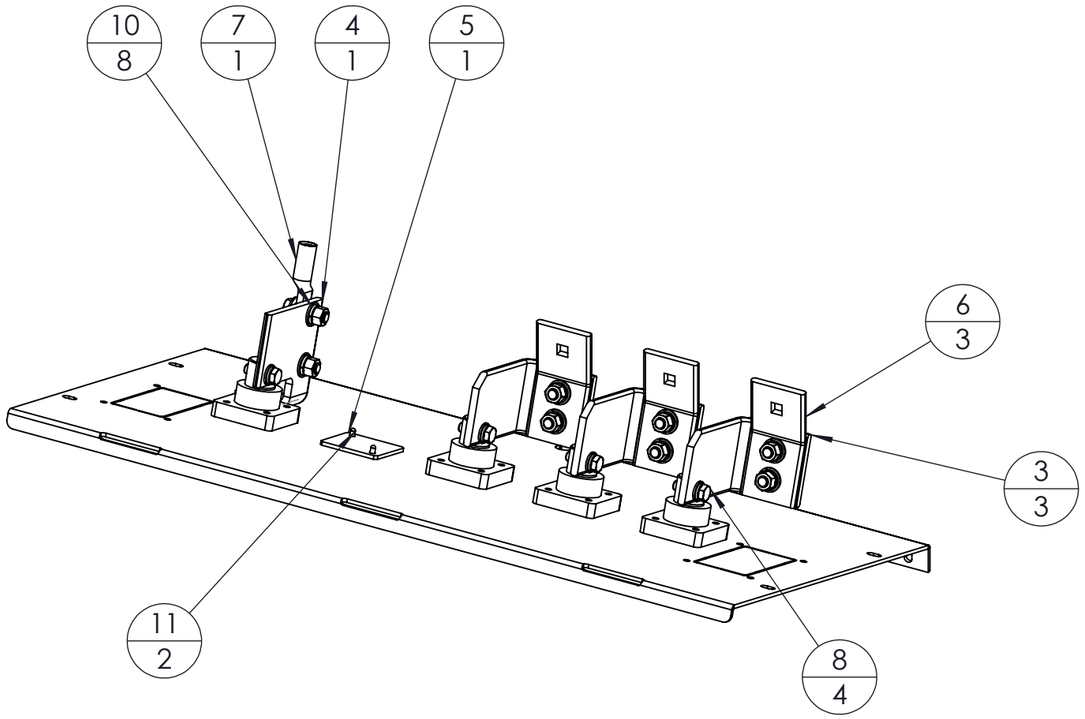

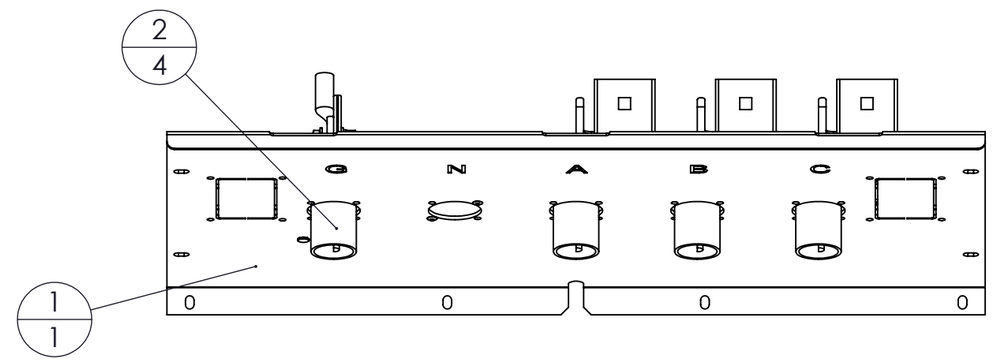

BILL OF MATERIAL

ITEM NO.	PART NUMBER	DESCRIPTION	QTY.
1	200-90001	PLATE, CAMPLATE, 400A C1	1
2	HBLMRBGN (G) OR HBLFRBGN (L)	Insulated Receptacle Single Pole Single Hole Busbar, Green Male	4
3	240-90004	BUS, CAMLOCK CONNECTOR, 400A	3
4	240-90007	BUS BAR, CAMPLATE, UPTO 1200A, GROUND COMMON	1
5	200-30438	COVER, EMPTY CAMLOCK BLANK	1
6	240-90006	BUS, ADAPTER, CAMPLATE TO 400A FUSE, MOUNT	3
7	ALND-1.0-12-134 COMP LUG		1
8	890-0518A-1.0L	ASSEM, 5/16-18 UNC ZN X 1.00" BH - WF, WP	4
9	890-0420G	ASSEM, 1/4-20 UNC ZN, NS, WF	1
10	890-0616D-1.25L	ASSEM, 3/8-16 UNC ZN X 1.25" BH - WF, WF, WP, NH	8
11	ROB-R532X0706-ZN	RIVET, OPEN END BLIND - 5/32 X 0.188-0.250 GRIP RANGE - ZN	2

MATERIAL 13.24 lbs

FINISH
BARE

PROPRIETARY AND CONFIDENTIAL

THE INFORMATION CONTAINED IN THIS DRAWING IS THE SOLE PROPERTY OF FOXFAB POWER SOLUTIONS ANY REPRODUCTION IN PART OR AS A WHOLE WITHOUT THE WRITTEN PERMISSION OF FOXFAB POWER SOLUTIONS IS PROHIBITED.

DRAWN BY: LB
SAVED ON: 7/18/2025
BD: -
TOP DIE: -
BOTTOM DIE: -

UNLESS OTHERWISE SPECIFIED:
DIMENSIONS ARE IN INCHES
TOLERANCES:
X ± .25
X.X ± .1
X.XX ± .05
X.XXX ± .025
ANGULAR ± 1
INTERPRET DIM AND TOL. PER:
ASME Y14.5

Foxfab Power Solutions
2579-188 ST.
SURREY, BC V3Z 2A1
(604) 460 - 9310
WWW.FOXFAB.COM

TITLE:
ASSEMBLY, CAMPLATE, NO NEUTRAL, 400A FUSE ADAPTERS

THIRD ANGLE:
SIZE **B**
SCALE 1:5
REV A
ITEM NO.
DWG. NO. 100-90001
SHEET 1 OF 1

REVISION				
REV.	ZONE	DESCRIPTION	DATE	DRAWNBY
A		INITIAL RELEASE	7/17/2025	L. BADONG

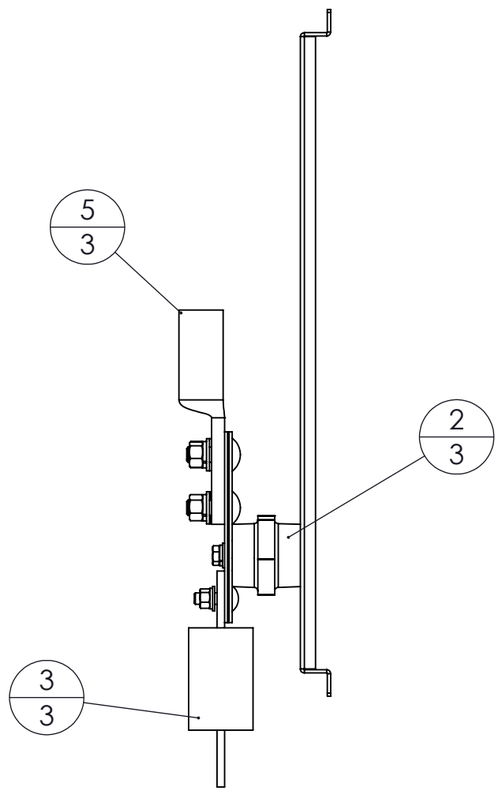

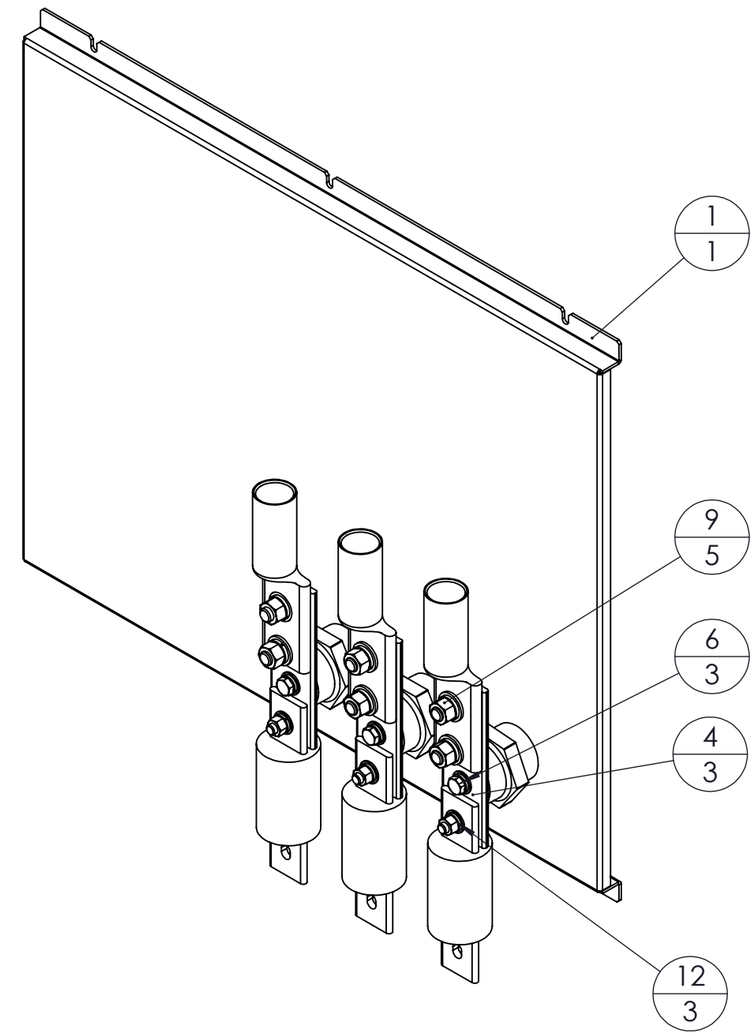

BILL OF MATERIAL

ITEM NO.	PART NUMBER	DESCRIPTION	QTY.
1	250-90002	BACKPAN, 800A C1 W/ FUSES, 42x30x16 ENCL	1
2	559687	2-1/4" X 3/8"-16 THREAD, INSULATED STANDOFF	3
3	Mersen_A4J400	400a, type-j power fuse, 65ka	3
4	240-90005	BUS, 400A, FUSE	3
5	ALND-750-12-134 COMP LUG		3
6	890-0616A-1.0L	ASSEM, 3/8-16 UNC ZN X 1.0" BH - WF, WP	3
7	890-0813E-1.5L	ASSEM, 1/2-13 UNC ZN X 1.5" BC - WF, WP, NH	1
8	BC-0813X1500-ZN	BOLT, CARRIAGE - 1/2-13 UNC X 1.5 - 5 ZN	5
9	NH-0813-ZN	NUT, HEX - 1/2-13 UNC - 5 ZN	5
10	WF-0500-ZN	WASHER, FLAT - 1/2 - ZN	5
11	WP-0500-ZN	LOCK WASHER, SPLIT, 1/2" NOMINAL ID, ZN	5
12	890-0616E-1.25L	ASSEM, 3/8-16 UNC ZN X 1.25" BC - WF, WP, NH	3

MATERIAL 14454.29 lbs
PER PART DWG

FINISH
BARE

PROPRIETARY AND CONFIDENTIAL

THE INFORMATION CONTAINED IN THIS DRAWING IS THE SOLE PROPERTY OF FOXFAB POWER SOLUTIONS ANY REPRODUCTION IN PART OR AS A WHOLE WITHOUT THE WRITTEN PERMISSION OF FOXFAB POWER SOLUTIONS IS PROHIBITED.

DRAWN BY: LB
SAVED ON: 7/18/2025
BD: -
TOP DIE: -
BOTTOM DIE: -

UNLESS OTHERWISE SPECIFIED:
DIMENSIONS ARE IN INCHES
TOLERANCES:
X ± .25
X.X ± .1
X.XX ± .05
X.XXX ± .025
ANGULAR ± 1
INTERPRET DIM AND TOL. PER:
ASME Y14.5

Foxfab
Power Solutions
2579-188 ST.
SURREY, BC V3Z 2A1
(604) 460 - 9310
WWW.FOXFAB.COM

TITLE:
ASSEMBLY, BACKPANEL, 400A C1 W/ FUSES

THIRD ANGLE:
SIZE **B**
SCALE 1:5
REV A
ITEM NO.
DWG. NO. 100-90002
SHEET 1 OF 1